INCOMPARABLE DEEP CYCLE GEL BATTERY

LDC12-68 (12V68Ah)

LEOCH BATTERY



CHARACTERISTICS

Item		Specifications
Voltage		12V
Dimension	Length	229mm (9.02inches)
	Width	138mm (5.43inches)
	Container Height	210mm (8.27inches)
	Total Height	216.5mm (8.52inches)
Approx Weight		17.5kg (38.6lbs)
Terminal		T6(M6)
Container Material		ABS
Capacity	20HR	68Ah
	5HR	57Ah
Operating Temp. Range	Discharge	-20~55°C (-4~131°F)
	Charge	0~40°C (32~104°F)
	Storage	-15~40°C (5~104°F)

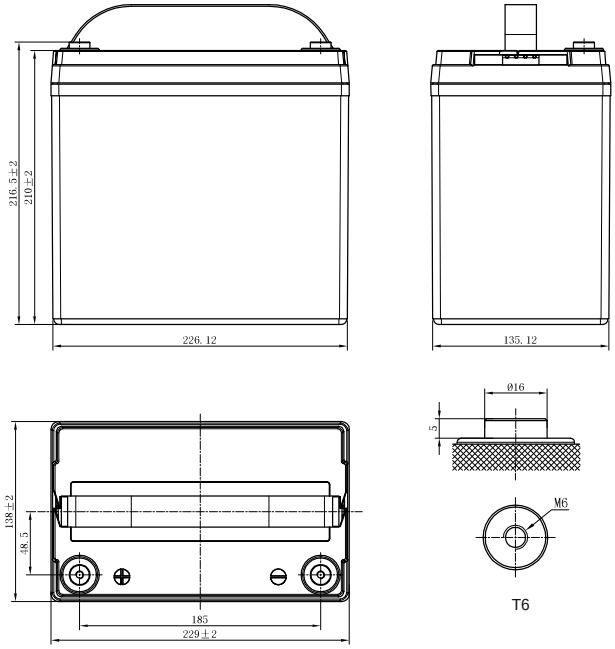

APPLICATIONS

- Electric vehicle
- Golf cart
- Sightseeing
- Cleaning equipment
- AWP
- Mobility

carbon

GEL technology

Note: Terminal Torque Values in-lb(Nm):34.52-47.79(3.9-5.4)

INCOMPARABLE DEEP CYCLE GEL BATTERY

LDC12-68 (12V68Ah)

GENERAL FEATURES

Stable initial capacity

- PAM/NAM amount optimization
- 4BS crystal paste mixing & curing technology
- Double layer separator technology
- Improved design electrolyte S.G.

Improved PSoC cycling

- Carbon boost technology
- Mix carbon boost technology
- Targeting for higher level through carbon technology

Excellent deep cycle performance

- Plate assembly pressure re-engineering
- New PAM/NAM recipe introduced
- Gel electrolyte technology
- Rare earth alloy
- Double layer separator technology
- Lower acid filling temperature

Less water loss

- PAM/NAM amount optimization
- New PAM/NAM recipe introduced
- Rare earth alloy

Delay PAM softening and shedding

- Plate assembly pressure re-engineering
- 4BS crystal paste mixing & curing technology
- Higher paste density

Solve NAM sulphation

- Carbon boost technology
- Pre-sulfate technology

Optimize electrolyte stratification

- Introduce AGM-GEL technology

Charging Profiles

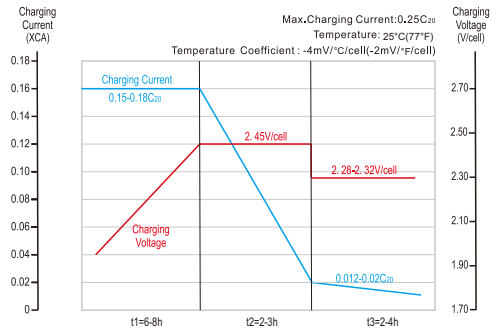

Relationship of OCV and State Of Charge

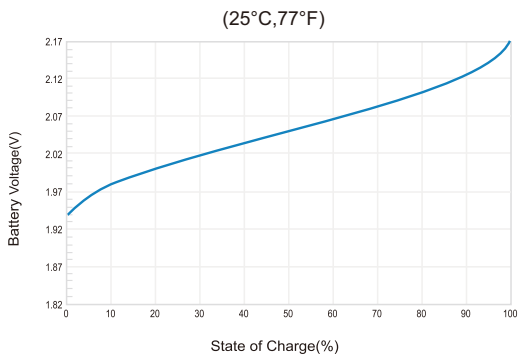

Cycle Life in Relation to Depth Of Discharges

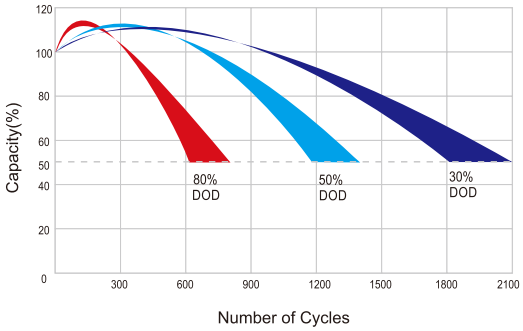

Self-discharge Characteristics

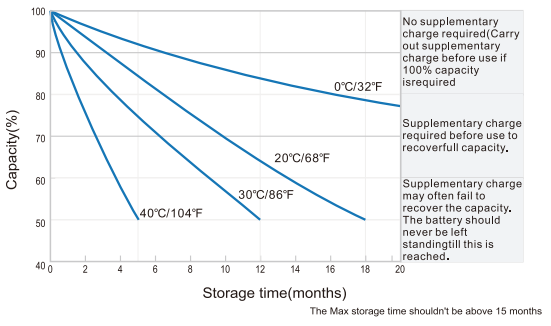

Leoch International Technology Ltd.
www.leoch.com

Leoch Batteries Pte Ltd
www.leoch.sg

Leoch Battery Corporation
www.leochamericas.com

Leoch Europe S.A.
www.leoch.eu

Data above is recommended and the picture is only for battery effect display, Leoch reserve the final right of explanation.
© LEOCH. All rights reserved.Trademarks and logos are the property of LEOCH and its affiliates unless otherwise noted.Subject to revisions without prior notice. E&OE.

Publication No.:LB-LDC12-68-PD-DZ-V1.1-20250307